VZ COMPUTING

NEWSLETTER

AUCKLAND VZ 300/200
COMPUTER USERS CLUB

ISSUE Nº: 5 - FEB 1987

(C) Auckland VZ 300/ 200 computer user's club 1986.

All material in this newsletter is subject to copyright. Contributed program's & articles can be reproduced on the under standing that they are for the private use of subscriber's only. Copyright is retained by the author.

CONTRIBUTIONS

The following points will help those thinking of sending program's for publication in this newsletter.

If possible send a listing and a tape of your program. This helps me prepare the newsletter and the tape will be returned when I have finished.

Include some notes on what the program does and how to use it.
What is painfully obvious to the author is often obscure to we users.

For long or complex program's let me know if I can supply readers with a copy of it on tape or if you are prepared to do this yourself.
I urgently require program's and items for this newsletter.

Membership $10-00 per year for 12 issues

POSTAL ADDRESS

P.O Box 1972 C.P.O AUCKLAND...

News and Views

Well its february already and the Vz scene is still very quiet The new books have arrived, Well at least the GIANT BOOK OF GAMES and the VZ 300 Technical Manual .

Also available is the VZ 300 OMNIBUS ,Still to come is programming the VZ 300 .

I am reading these books at the moment and will be writing a review or reviews of both as soon as possible for this newsletter.

On friday the 23rd Jan D.S.E had another warehouse sale at newmarket There was a little bit of VZ software on sale at $2.00 a tape.

IN this newsletter is the second part of Bob Kitchs item. And also a Sound Effects Program which is also written by bob.

You will also find two very interesting reviews in this newsletter ,one for the D.S.E program called DIG OUT and the other for VSOFTWAREZ ..

If anyone has some programs or other items that can be used in this newsletter please send them to me .

I am waiting for a lot of information to arrive from some more of my correspondents in australia. When this lot arrive i will share as much as possible with members both thorough this newsletter and sending items direct to members ,so let me know what kind of Information you would like or need so you don't get any thing you can't use.This will save time and money coping this information.

```
10 '*:*******************
20 '**   SOUND EFFECTS  **
30 '**     LE VZ  #10   **
40 '**   R.B.K. 30/1/86 **
50 '**********************
60 '
100 '*****POKE IN ROUTINE*****
110 FOR T=-28687 TO -28676
120 READ D: POKE T,D: NEXT T
130 DATA 229,033,160,000,001,003          ,000,205,092,052,225,201
140 POKE30862,241: POKE30863,143
200 '*****MAIN MENU*****
210 CLS
220 PRINT:PRINT"       [redacted]":PRINT
230 PRINT"  1. [redacted]"
240 PRINT"  2. [redacted]"
250 PRINT"  3. [redacted]"
260 PRINT"  4. [redacted]"
270 PRINT"  5. [redacted]"
280 PRINT"  6. [redacted]"
290 PRINT"  7. [redacted]"
300 PRINT"  8. [redacted]"
310 PRINT"  9. [redacted]":            PRINT"  E. [redacted]"
320 PRINT@466,"        ";
330 PRINT@448,"ENTER OPTION #  ";: INPUT OP$
400 '*****BRANCH TO CHOICE*****
410 IF OP$="1",1100
420 IF OP$="2",1200
430 IF OP$="3",1300
440 IF OP$="4",1400
450 IF OP$="5",1500
```

```
460 IF OP$="6",1600
470 IF OP$="7",1700
480 IF OP$="8",1800
490 IF OP$="9",1900
500 IF OP$="E" THEN CLS:STOP
510 GOTO 320
1100 '*****DECAYING ZOOP*****
1110 CLS:PRINT@232,"DECAYING ZOOP"
1120 FOR T=1 TO 255 STEP 4
1130 POKE-28685,T
1140 X=USR(0): NEXT: GOTO 210
1200 '*****INCREASING ZOOP*****
1210 CLS:PRINT@232,"INCREASING ZOOP"
1220 FOR T=255 TO 1 STEP -4
1230 POKE-28685,T
1240 X=USR(0): NEXT: GOTO 210
1300 '*****RANDOM BEEPS*****
1310 CLS:PRINT@234,"RANDOM BEEPS"
1320 POKE-28682,10
1330 FOR T=1 TO 50
1340 R=RND(254)+1:POKE-28685,R
1350 X=USR(0): NEXT
1360 POKE-28682,70: GOTO 210
1400 '*****WAVES*****
1410 CLS:PRINT@237,"WAVES"
1420 POKE-28682,1
1430 FOR Y=1 TO 10:FOR T=1 TO 10
1440 POKE-28685,T: X=USR(0):NEXT
1450 FOR T=30 TO 1 STEP -1
1460 POKE-28685,T: X=USR(0):NEXT
1470 NEXT Y
1480 POKE-28682,4: GOTO 210
1500 '*****INCREASING PHASOR*****
1510 CLS:PRINT@230,"INCREASING PHASOR"
1520 FOR Y=20 TO 1 STEP -1
1530 FOR T=Y TO 1 STEP -1
1540 POKE-28685,T:X=USR(0)
1550 NEXT T: NEXT Y: GOTO 210
1600 '*****DECREASING PHASOR*****
1610 CLS:PRINT@230,"DECREASING PHASOR"
1620 FOR Y=1 TO 20
1630 FOR T=1 TO Y
1640 POKE-28685,T:X=USR(0)
1650 NEXT T: NEXT Y: GOTO 210
1700 '*****UFO LEAVING*****
1710 CLS:PRINT@233,"UFO LEAVING"
1720 C=61: FOR T=60 TO 1 STEP -1
1730 POKE-28682,T:POKE-28685,C
1740 C=C-1: X=USR(0):NEXT T
1750 GOTO 210
1800 '*****UFO LANDING*****
1810 CLS:PRINT@233,"UFO LANDING"
1820 C=1: FOR T=1 TO 60
1830 POKE-28682,T:POKE-28685,C
1840 C=C+1: X=USR(0):NEXT T
1850 GOTO 210
1900 '*****BUZZER*****
1910 CLS:PRINT@236,"BUZZER"
1920 POKE-28682,3: POKE-28685,60
1930 FOR T=1 TO 100: X=USR(0)
1940 FOR Y=1 TO 5: NEXT Y: NEXT T
1950 POKE-28682,3
1960 GOTO 210
2000 END
```

The remaining four control lines are interesting as they are not 'hard-wired' but are set up to be 'soft switched' — although two quite different techniques are used.

The INV line is connected to bit 6, or DD6, of the data bus. Thus, whilst in Alphanumeric mode, the second most significant bit of a byte contained in video RAM controls whether a normal or inverse character is displayed. The line that selects between Alphanumeric and Semigraphic modes — *A/S — is similarly connected to the most significant bit or DD7. thus this bit determines whether the VDG should interpret a particular byte as an ASCII character or a graphics shape.

The remaining two lines are connected into the Output Latch mapped into 6800H. As mentioned before, this is a 6-bit write-only latch. It permits certain software commands to set or reset a particular bit of the latch and hence switch or control specific hardware interfaces. Figure 4 is a schematic of the portions of the latch which is of interest to us here. A copy of the latch is held in RAM at location 783BH. The *A/G line, which selects between hi- or lo-res screens, is connected to bit 3 of the Output Latch. If this bit is low or 0, then the screen is in lo-res mode which corresponds to Alphanumeric and Semigraphic modes. If the bit is high or 1, then hi-res or Graphics (CG2) mode is selected. It is quite simple to see that the MODE (X) command in BASIC directly sets this bit of the latch — where X maybe 1 or 0. Note that bit 3 of the latch corresponds to a value of 0BH on the latch.

The Colour Select line (CSS) is connected to bit 4 on the latch which maps as a value of 0FH. The effect of this line differs according to the mode selected. The CSS pin selects the background colour of the display and in so doing determines the colour set which may be displayed. When CSS is low or 0 the background colour is green, but if set high or 1, then in lo-res the background colour is orange, but if in hi-res then the background is buff. Sounds a little confusing — but actually it isn't, given a little thought and reflection on Table 1 and Figure 1. Furthermore, in hi-res mode this pin selects which of the two colour sets (each containing four colours) will be selected. Colour set 0 consists of green, yellow, blue and red, whilst colour set 1 consists of buff, cyan, magenta and orange. Clearly, this pin is set by the COLOR F, B command where B determines the background colour and F determines foreground colour.

An understanding of the operation of the mode control lines gives a good insight into how the BASIC interpreter interfaces with the hardware and the real world via the screen display.

For the hardware enthusiasts, and others closely following this article, the penny should have dropped as to how other screen modes can be made selectable on the VZ by some simple hardware alterations.

Improved graphics on the VZ computer

One of the disappointing features of the graphics capability of the VZ is that the Semigraphics (SG4) and Graphics (CG2) modes have rectangular characters and elements which considerably detract from the appearance of the displays. This feature can be remedied.

The following simple hardware modifications are outlined for those who feel they are competent tackle it. They involve the installation of three switches on the VZ. Figure 3 provides an indication of what is required.

If *INT/EXT can be switched high, then Semigraphic mode SG6 becomes available on the computer. This has the advantage of giving higher screen resolution and, although the characters are still rectangular, their elements are square rather than rectangular as in the standard implementation of SG4 mode.

In Graphics mode, only CG2 is available in the VZ. By switching GM1 and GM2 it is possible with the 2K of video memory to implement a further three modes (CG1, RG1 and RG2). There is little point in switching GM0 as there is insufficient memory to cover modes (xi) to (xiv). The element size in SG6 and CG1 is the same (3x4 pixels) and so there is little to choose between them — although their usage of memory is different and the characters in SG6 mode can be 'specified' through the keyboard as is done in SG4 mode on the VZ.

RG1 has the same resolution as the standard MODE (1) display but is only two-colour and consequently uses only half the memory space. the real benefit of adding the switches is in obtaining RG2 mode on the VZ. Although this only two colour, the element size is 2x2 pixels and is square. This is a great mode for plotting graphs for instance, where the screen resolution is 128 elements across by 96 elements down the screen.

To achieve this modification, use three SPDT toggle switches. Wire one side of each switch to +5 V, or pin 17 on the VDG, and wire the other side of each switch to ground or pin 1 of the chip. Cut the tracks leading from pins 27, 29 and 31 (GM2, GM1 and *INT/EXT) and wire the chip side to the centre terminal of a switch. This enables the three control lines to be switched high or low. (See inset on Figure 3.)

There you have it! It remains now to develop suitable software to drive these additional modes. The possibilities opened by the 'square' modes of SG6 and RG2 are exciting. (Who is going to submit some drivers for this conversion?)

As an afterthought, whilst you have got the VZ on the bench, why not add a RESET switch? A normally closed push-button switch inserted into the 'reset on power-up' line overcomes the annoying business of powering-down the VZ for resetting.

— continued next month.

BIT	
5	
4	Q4 → CSS VDG background colour. 0 green (hi- and lo-res) 1 orange (lo-res) buff (hi-res)
3	Q3 → $\overline{A/G}$ VDG display mode. 0 lo-res 1 hi-res
2	
1	

Figure 4. Schematic of Output Latch mapped at 6800H (26624D) in VZ computers. (Other latches are used to control piezo-speaker and cassette output)

WE WANT YOUR WORDS!

— and circuit sketches, and ideas, and news, and views, and letters.

WRITE TO US! WRITE FOR US!

If you have a completed, or part completed article outline — 'phone, write or call us. You might get your words of wisdom in print! And a little cash in your hand.

CONTACT: The Editor, Roger Harrison Australian Electronics Monthly, PO Box 289, Wahroonga 2076 NSW (02) 487 2700.

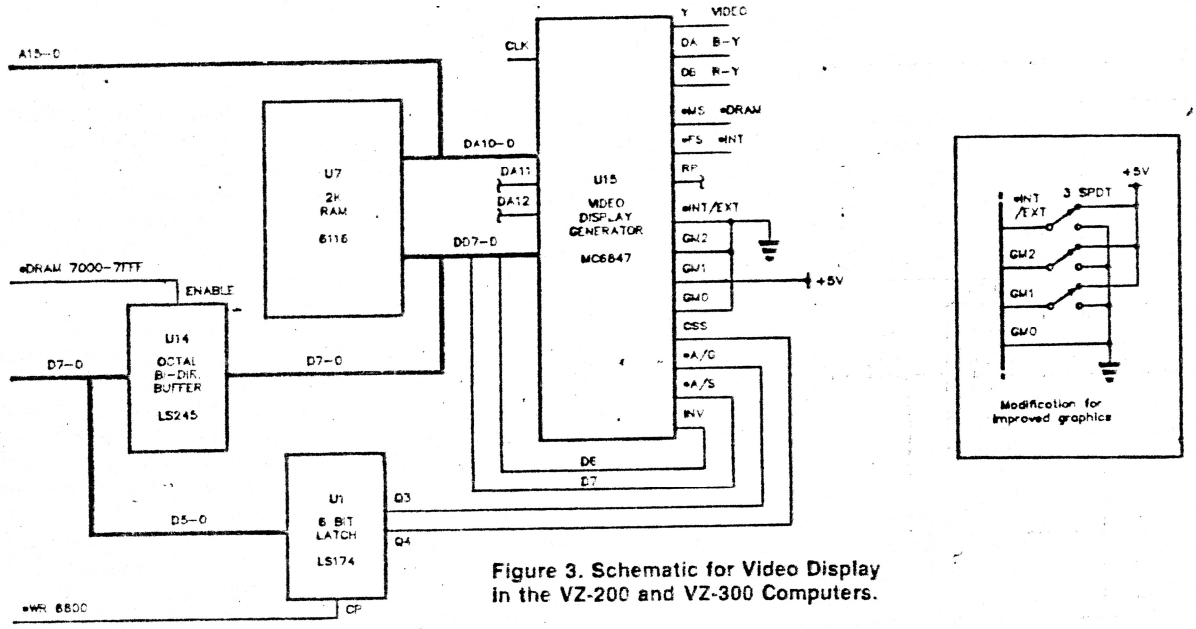

Figure 3. Schematic for Video Display in the VZ-200 and VZ-300 Computers.

iv) Power Supply.
Vss: 0 V supply — normally ground.
Vcc: +5 supply.

v) Video Lines.
These are four analogue signals:

OA B-Y chroma — a three-level signal used in combination with OB and Y to specify one-of-eight colours.

OB R-Y chroma — a four-level signal; the fourth is used as colour burst timing reference.

Y luminance — a six-level signal containing composite sync, blanking and four levels of luminance.

CHB chroma bias or a test point — not used in applications.

vi) Device Synchronising Controls.

*MS memory select, three-state control to allow the MPU to address the video RAM.

CLK 3.579 MHz clock.

*FS field sync to indicate the end of the active display area during which time the MPU may have access to the video RAM without causing undesirable flicker on the screen.

*HS horizontal sync to the TV receiver.

*RP row preset — important when an external character generator ROM is used.

From this brief description, a grasp of how the VDG operates may be gleaned. We will now examine how this particular VDG chip is used in a home computer application — the VZ computer.

The MC6847 in the VZ-200/300 computer

In the VZ computer a number of display modes using the MC6847 are available. Specifically, modes (i), (ii), (v) and (ix) on Table 1 are implemented as standard on the VZ. These modes are 'soft switched' or software selectable from the ROM-resident BASIC and will be described in detail later in this article.

The video display system in the VZ consists of a number of components or 'blocks' — but the heart of the display system is the VDG just described. This device interfaces with 2K of dynamic video RAM which occupies 7000H to 77FFH of the memory map for the Z80A MPU used in the VZs. Additionally, a hex write-only latch mapped at 6800H (but extending to 6FFFH due to simplified address decoding) controls, via software, the display modes implemented on the VZ.

The analogue outputs from the BDG are processed by further video circuitry which need not concern us here. All of these blocks are synchronised by a 3.58 MHz clock. This is an instance where the full speed of the Z80A (4 MHz) is not realised due to impositions by the video display.

More significantly however, the architecture of the VZ has only allowed 2K of RAM for the video display. This effectively prohibits the implementation of some of the hi-res graphics modes. [Specifically, modes (xi) to (xiv) in Table 1]. The VZ does not contain an external character generator ROM and relies entirely upon the VDG on-chip character ROM. Clearly, the VZ is manufactured to a price (and a very attractive one at that!) and was designed to interface with Microsoft's BASIC Level II ROM routines. Despite these comments, there are opportunities to make a few slight and simple changes to the hardware around the VDG to implement additional display modes with improved resolution. It is also possible to add an external character generator — but more of these later.

Figure 3 is a diagrammatic representation of the way in which the MC6847 VDG is interconnected in the VZ computers. The address lines DA0-DA10 (11 lines) are connected to U7 — a 6116 2K RAM chip — which is mapped as the video RAM section of memory. Lines DA11 and DA12 are not connected, thereby limiting the addressable video memory to 2K. Data lines DD0-DD7 (eight lines) are connected into the data bus from the MPU of which the 2K video RAM memory of course forms a part. The way in which the eight control lines are connected is of interest as these determine the type of displays available on the VZ.

Reference to Table 1 will indicate how the control lines are configured. The Graphics display group consist of GM0, GM1 and GM2. As can be seen from Figure 3, both GM0 and GM2 are tied low (to ground) whilst GM1 is tied high, to the +5 V Supply. Similarly, *INT/EXT is permanently tied low, thereby enabling the on-chip character generator ROM. The configuration of GM0-GM2 to 010B means that only Colour Graphics Two (CG2) is implemented when Graphics mode is selected.

Hardware and software aspects of screen handling on the VZ-200/300

Concluding with coverage of the software interface in the VZ and the MC6847 VDG, looking at the standard screen modes.

Part 2
Bob Kitch

IT IS NOW OPPORTUNE to briefly discuss the software interface in the VZ and the VDG. I will only discuss the standard screen modes used on the VZ — not the additional modes mentioned in Part 1.

Lo-res/Text/Mode (O).

In the lo-res mode the screen is formatted into 16 lines down the usable window with each line containing 32 characters. Thereby providing 512 addressable characters on the screen. A quick calculation (or look at Table 1) will show that each character is composed of 8 by 12 pixels (or dots). Furthermore, each character is 'described' in a single byte in the video RAM section of memory. The upper left-hand character on the screen is memory mapped onto address 7000H (28672D), and the lower right-hand character is mapped onto 7000H + 1FFH (29183D). A memory map for the lo-res screen is given in Figure 5.

A formula is often used to calculate the address of a particular character on the screen. Let AA be the position of the character ACROSS the line (which ranges from 0 to 31) and let AD be the line number DOWN the screen (ranges from 0 to 15). i.e. working in the SE quadrant of an X-Y axis system. The relationship between (AA,AD) and the address in RAM is —

MAPPED ADDRESS = START ADDRESS + (32 * AD + AA) or
Addr = 28672 + (32 * AD + AA)

This calculation is often used in games to POKE values into selected memory locations or when screen formatting via the use of the PRINT@ statement where it is performed 'transparently'.

When the VZ is 'soft switched' to MODE (0) three of the modes in the VDG become available. There are internal ROM Alphanumerics (Normal and Inverse) and Semigraphics 4. There is no user-definable external character generator available in a standard VZ and also the Semigraphic 6 mode is not implemented due to hardware limitations. (Although I understand that the LASER 200 had SG6 rather than SG4 implemented as standard — but see previous section).

Let's digress for a while to describe how the on-chip customised character generator located in ROM on the VDG actually formats the 8 by 12 pixels to form each character. Firstly, in text mode. Table 2 shows the actual character set with corresponding codes resident in the VDG ROM. Figure 6 shows a typical character in Alphanumeric Mode (Internal). The spacing between characters across the line and between lines is set by the format held in the character generator. A Non-ASCII type character code is used on the VZ such that lower case (and control) ASCII characters are not represented. The 'lower case' ASCII values are used to signal 'inverse' characters by setting bit 6 high.

An Alphanumeric character in 'normal' mode is colour selectable as either green or orange with a black background. In 'inverse' mode, the character is black with the background

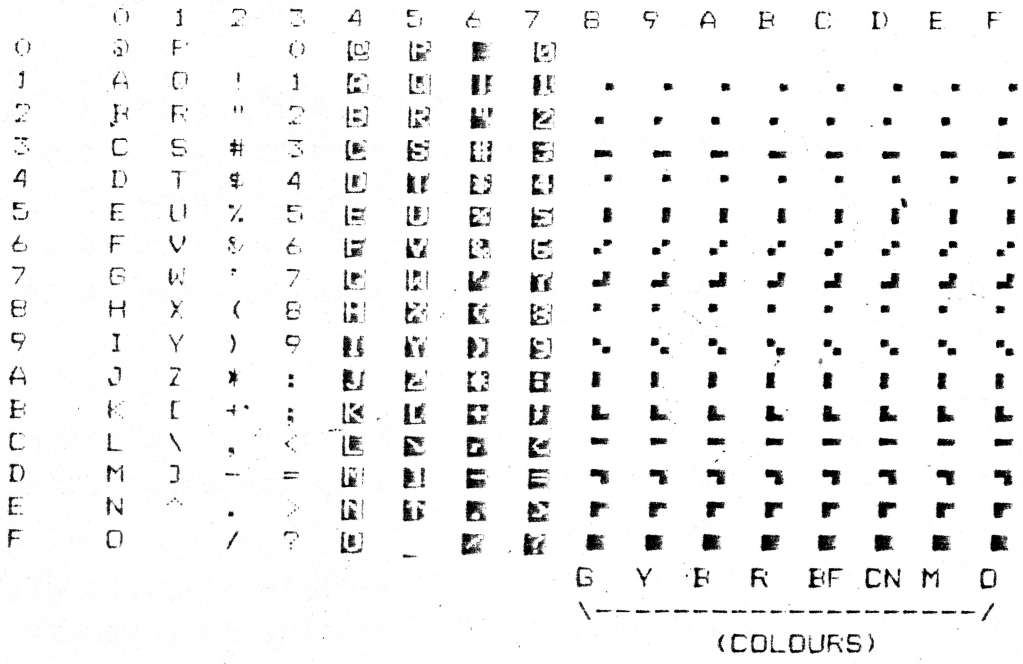

TABLE 2.
Alphanumeric and Semigraphic 4 character set for the VZ-200 and VZ-300 held in MC6847 on-chip ROM.
(Users — note errors in shape table held in VZ ROM for inverse J, X, 3 and 5).

REVIEW OF D.S.E PROGRAM 'DIG OUT'

loading time 2 min 22 sec
Joystick /Keyboard optional

The object of Dig Out is to track down and kill the underground Monster's and Fire-breathing Dragons of Dig-Dig.

The problem is that they are trying to do the same to you.

Before you start I suggest you read the Instructions carefully as this game is tricky.

You are the digger come Monster/dragon Exterminator and you must dig-your way into 'dig dig ' to let the enemy out of their caves and destroy them.

THe way to destroy them is to face them and pump them up until they Explode , WARNING you must be stationary and within range to pump.

Your only other defence is to drop rocks on top of the enemy. You are able to hold the rock's up until ready to let go,then just move aside.But watch you don't drop the rock on yourself.

Also watch you don't get to close to those dragons or they will breath fire at you and get you anyway.

The dragons and monsters enter a floating state now and then. While in this state they can move through everything including walls and rocks.

They will head straight for you and only stop floating when they enter a passage which you have already dug or when you have destroyed them.

You get a max of 9 diggers and every frame gets harder. For the first three or four frames completed you get a 1000 bonus points.There after you get 2000 bonus points per frame.

Watch when you get to frame four or five as what looks like one Monster or Dragon per cave or cavern ,is in fact two so if one don't get you the other may.

SUMMARY

Once again another new breed of VZ program with excellent graphic's and colour. one hopes that D,S,E keeps heading in the right direction with this new software.

DIGOUT i enjoyed the game .It is not easy to play,but with time you get the hang of it and a high score is possible IE 28900/29700 at Frame 7 or 8.Maybe the vz users group can start a high score register---

BY p.j Hill
(Auckland)

REVIEW VSOFTWAREZ & LE'VZ 200/300 OOP NEWSLETTER

These names may seem strange to some users. But if you have seen any of the software or read a copy of the newsletter .You would realize that these interesting names stand for user support,backup and heap's of help and information.

John D'Alton the man behind the name VSOFTWAREZ and the person that puts out the OOPs newsletter seems a very interesting fellow. He is very much dedicated to user support for the VZ computer. He enjoys speaking to user's and sharing his knowledge with others.

Some of the software available from VSOFTWAREZ include:-

EXTENDED BASIC
CASHBOOK LEDGER
COLOUR GRAPHICS and MEATPIES Etc Etc

And with more than 40 Software program's to choose from. This must be one of the best software selections around at the moment and the prices seem fair as well.

The newsletter is also well worth subscibing too.The OOP's, which stands for Owners,Operators,and Programmers,Sure get good value from each issue.

Of the two issue's i have,one has 10pages and the other 12 pages jam packed with hints,programs and general information.

Any user would be glad to receive a copy of one of these newsletters.

While the newsletters tend to be hard to fellow at times,because of the way they are set out ,who cares.

We users need all the support we can and will take it any way we can get it.

John does very well to put out such a Informative newsletter, I believe he does most of the preparation himself but gets alot of Input from other OOPs which we All know is important. Lets hope John keeps it up.

John has also published a book called VZ Programmes,Hints and Hardware #1 Which sells for $18.50 Aust.

Most of the dick smiths stores in New Zealand should have a sample copy of this book.I have seen the local shops copy and its Really good reading.

P.T.O

REVIEW VSOFTWAREZ & LE'VZ NEWSLETTER CONTINUED..

John's book has 48 Pages. There are some good looking program's, with lots and lots of hints and general programming information.

I was not able to try any of the program's in the book,but when i can afford to send John some money for my copy,I surely will..

I am sure that new users would really find this book of Great help to them.IT will give them more Insight into the VZ computer and good programming in general.

John has really worked hard on gathering all this Information Together and sorting it out for users. My only hope is that John will follow up book #1 with more of the same.Maybe Dick smiths will offer to help with book 2 and even dare we hope book 3??.

John has also sent a Demonstration Disc to some of the D.S.e stores in New Zealand and this Disc can be seen in operation at the store in Downtown Auckland for sure,.

THIS disc shows some of VSOFTWAREZ and other Interresting Information and uses for the VZ computer.

THANK YOU JOHN and god bless you for your time and your Knowledge and the hope you give we users

Please keep up the good work and support you share

John's ADDRESS IS

39 Agnes street
toowong 4066
Queensland Australia

If writing to John please send self addressed env.

(review by p.j Hill of Auckland)